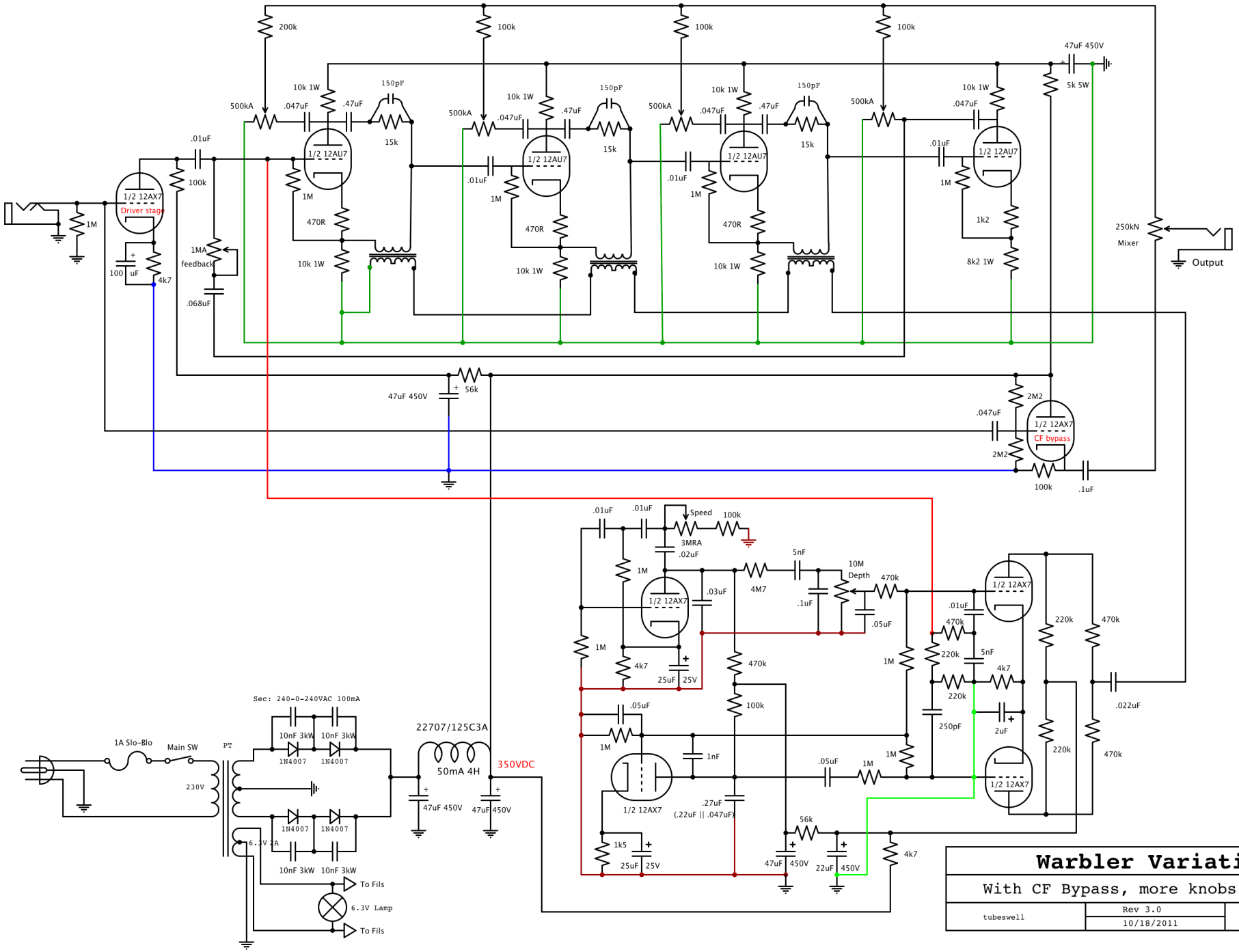

Warbler Variation #4

With CF Bypass, more knobs, brown trem

tubeswell	Rev 3.0	
	10/18/2011	