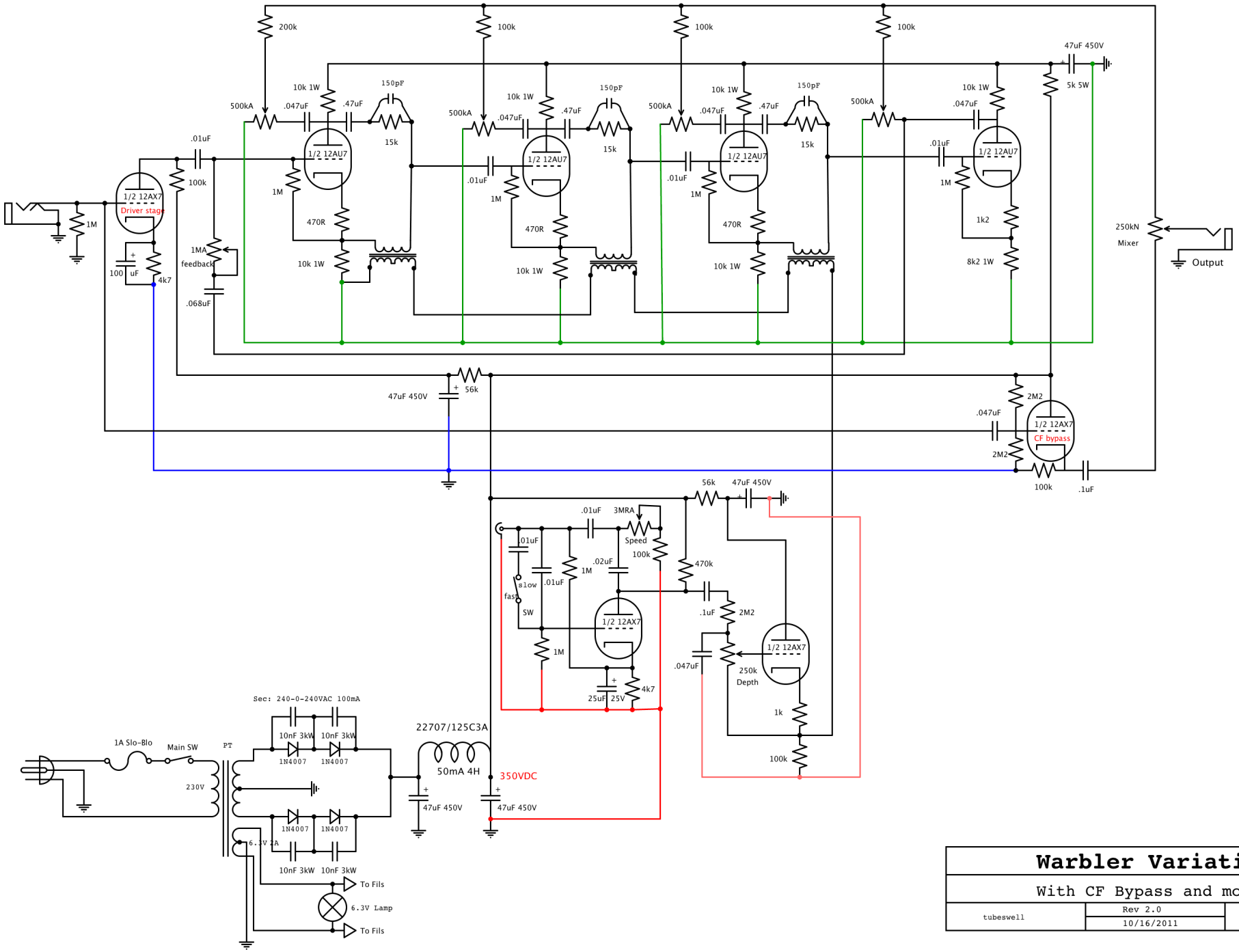

Warbler Variation #3

With CF Bypass and more knobs

tubeswell	Rev 2.0	
	10/16/2011	