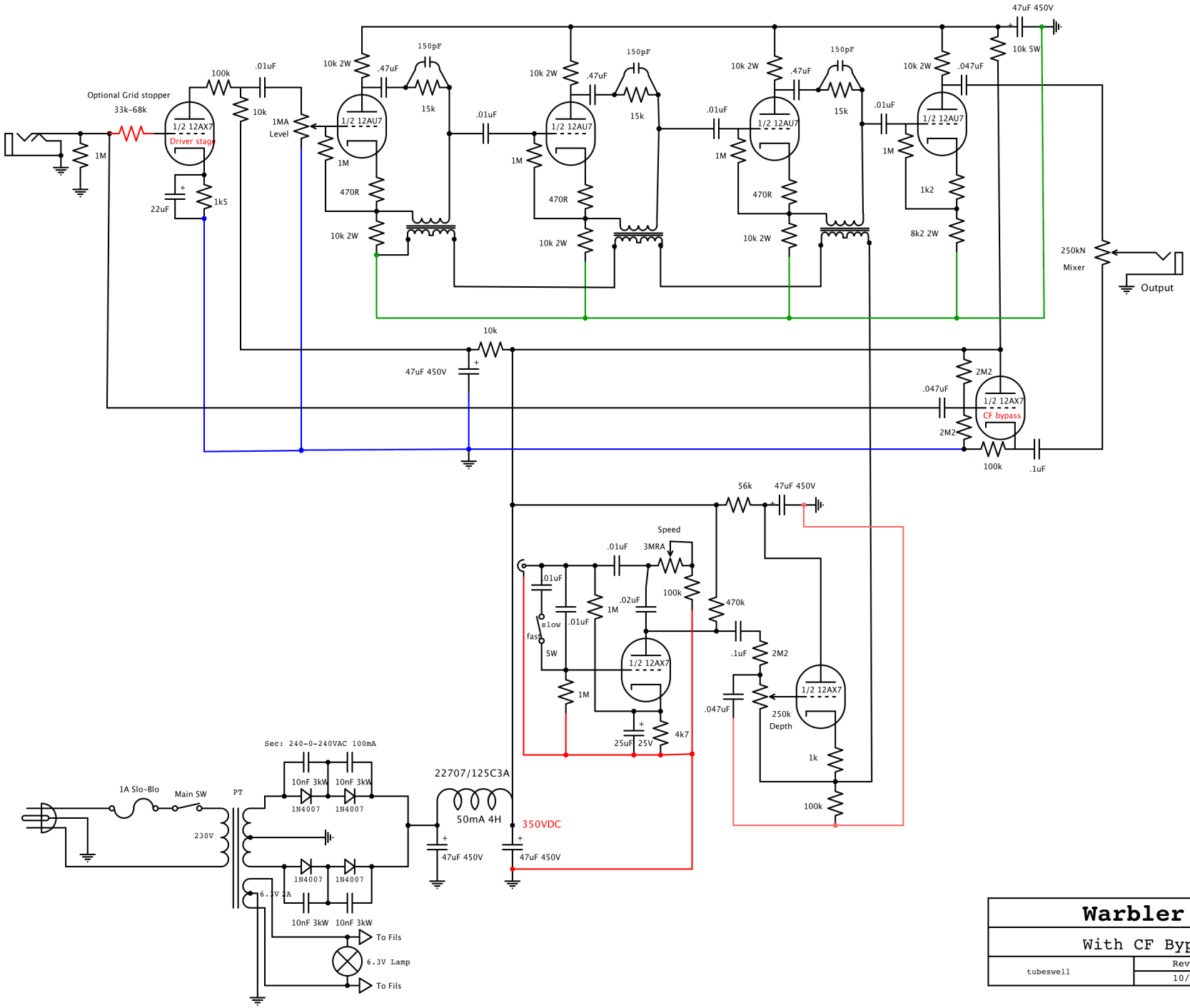

Warbler Variation #2

With CF Bypass

tubeswell	Rev 1.0	
	10/16/2011	