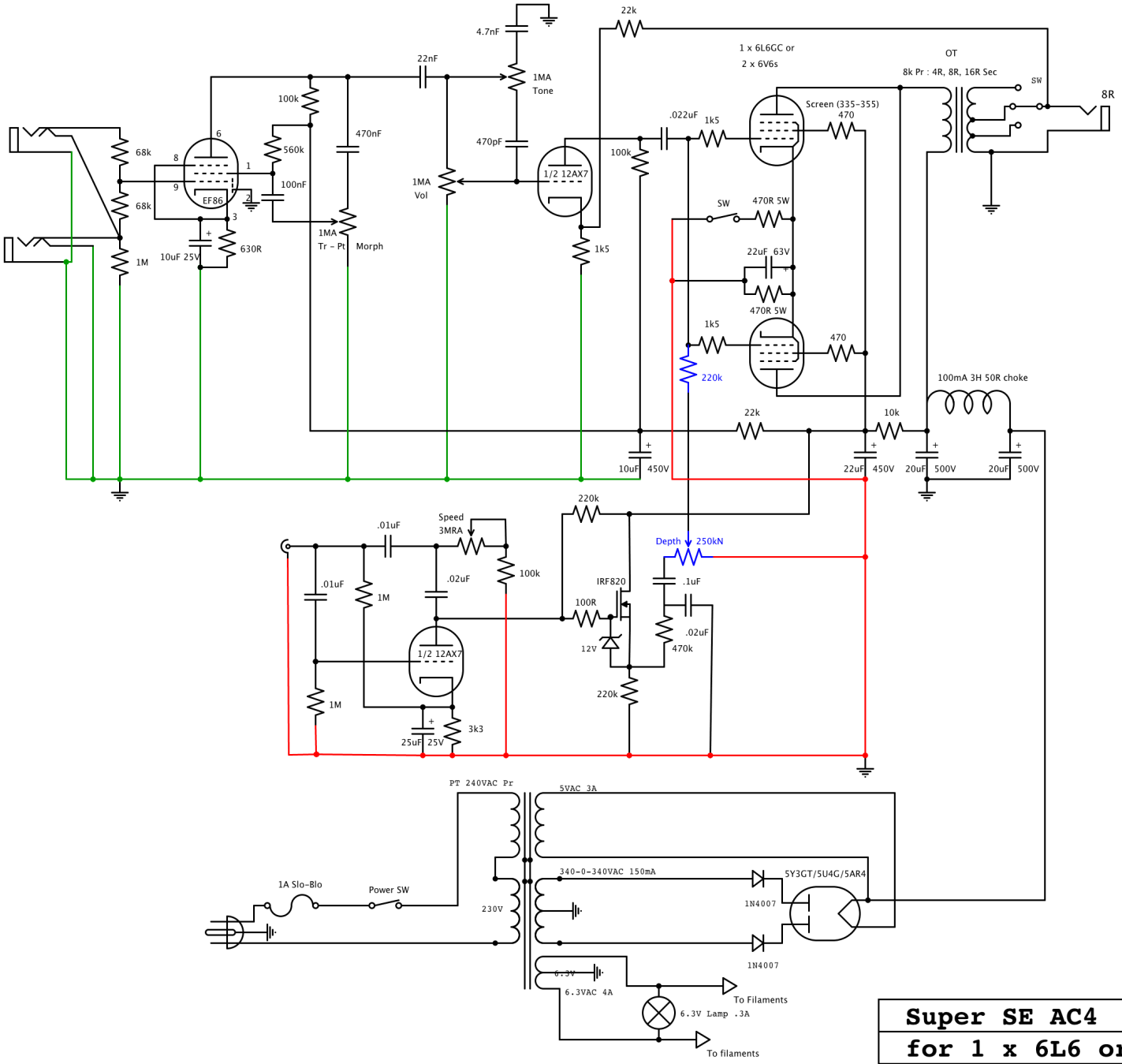

Super SE AC4		
for 1 x 6L6 or 2 x 6V6		
tubeswell	Rev 2.0 2011-01-22	Page #