HOFFMAN AB763 CIRCUIT
with 6G16 VIBROVERB TREMOLO
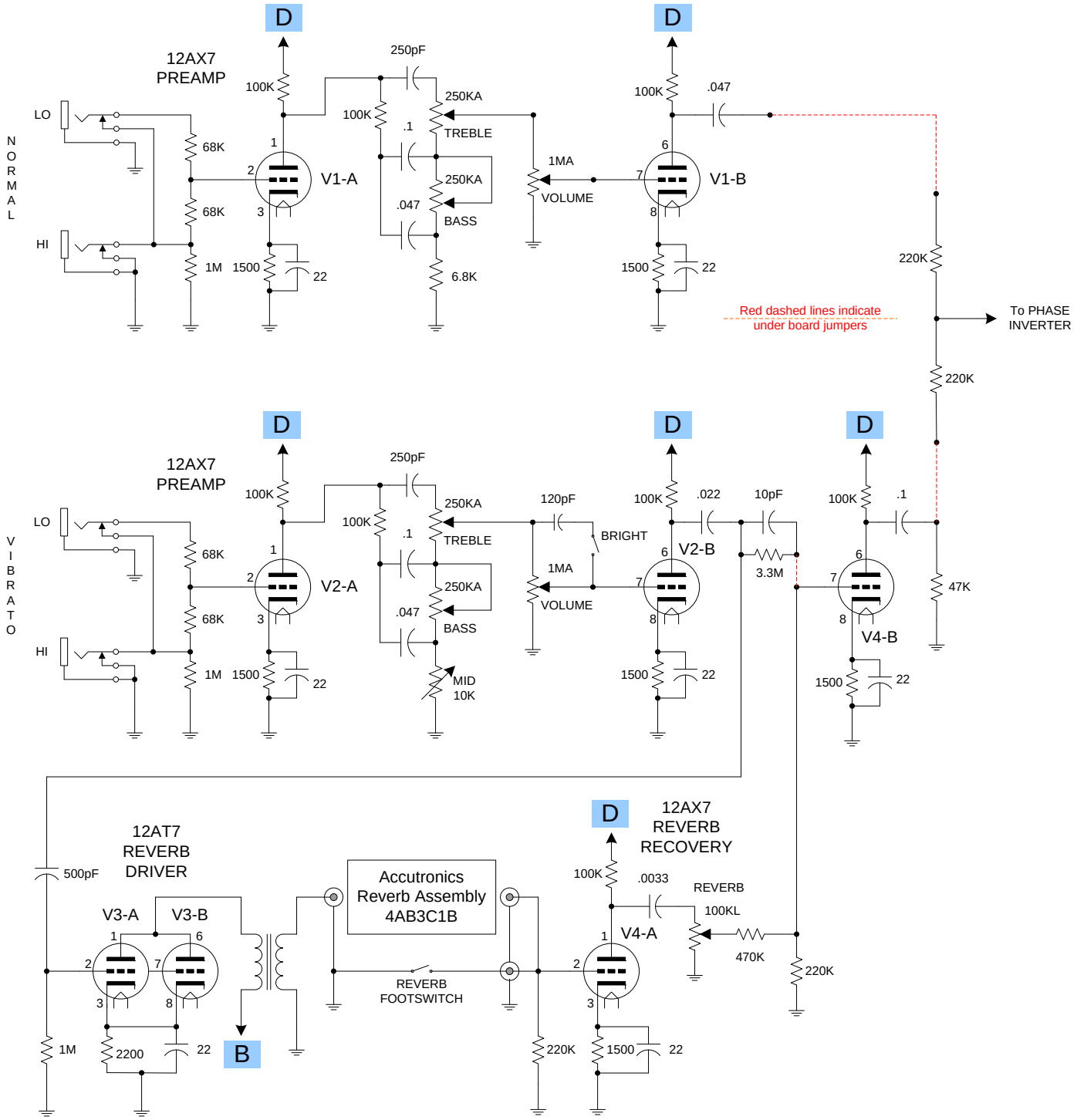
PREAMPS and REVERB